Dimensions

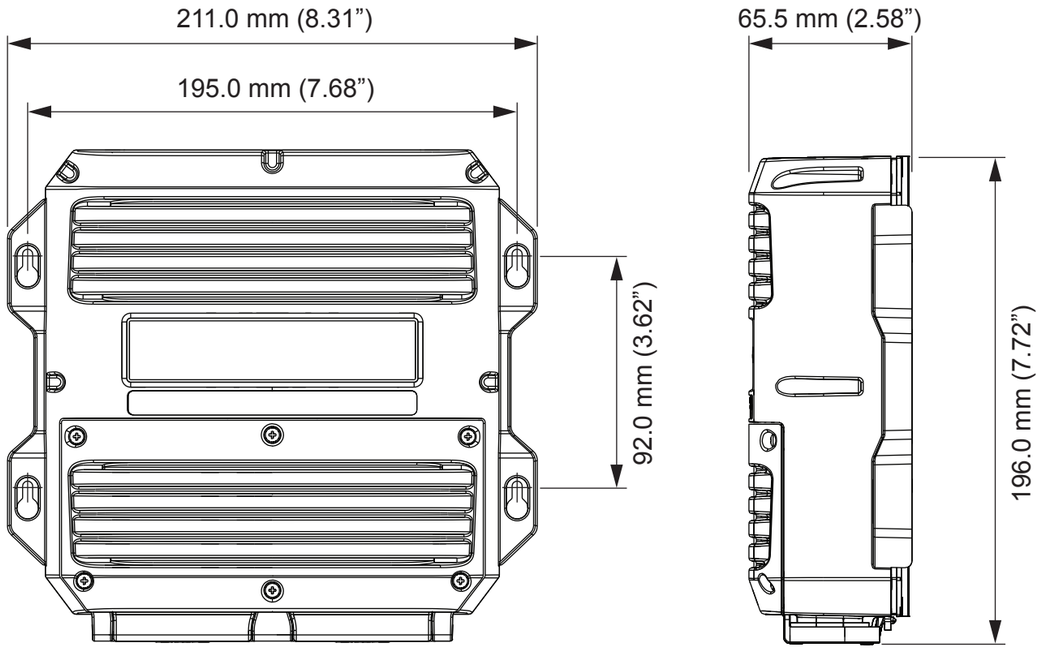

Mounting

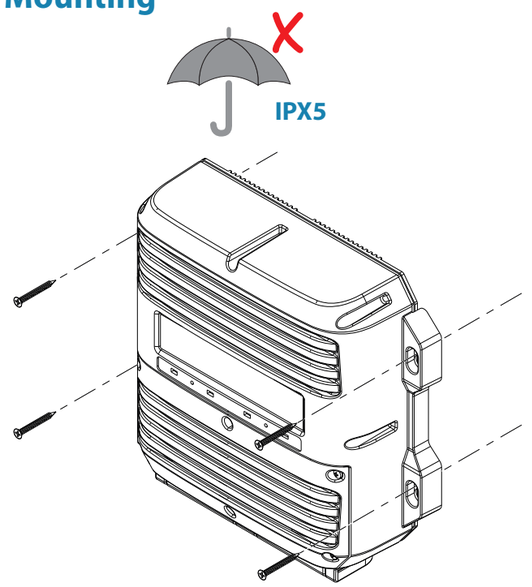

SIMRAD

B&G

NAC™ -3

INSTALLATION GUIDE

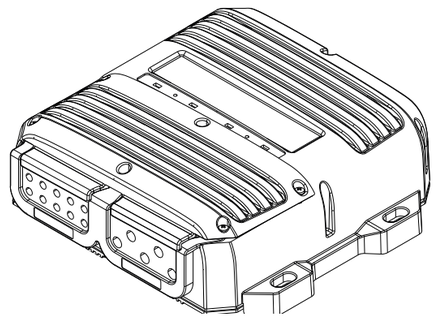

System wiring example

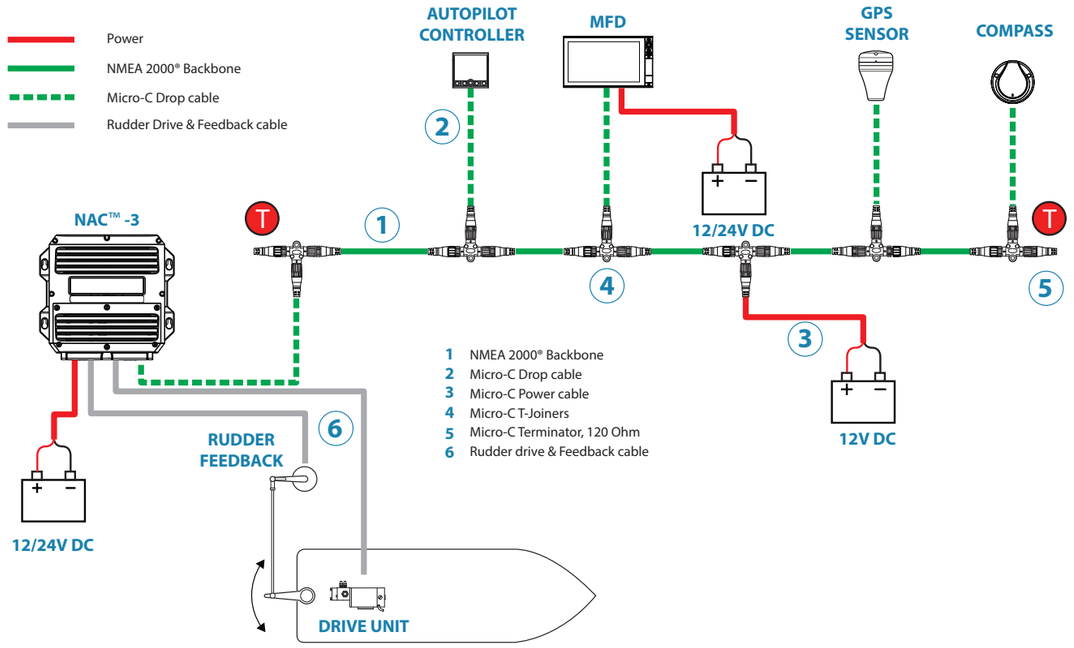

For setup instructions, commissioning guide, product manuals, technical specifications, certificates and declarations, refer to the product website:

www.simrad-yachting.com

www.bandg.com

Trademark

®Reg. U.S. Pat. & Tm. Off, and ™ common law marks. Visit www.navico.com/intellectual-property to review the global trademark rights for Navico Holding AS.”

988-11145-003

Parts included

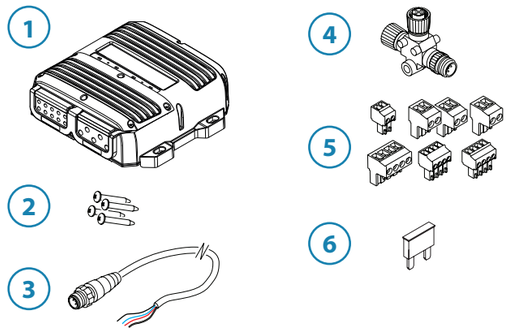

1. 1 x NAC™ -3 Autopilot Computer - IPX5
2. 4 x Fixing screws
3. 1 x Micro-C Drop cable (male) - 0.6 m
4. 1 x Micro-C T-Joiner
5. 7 x Connectors
6. 1 x 30 Amp fuse
7. Warranty card & literature pack

Terminal access

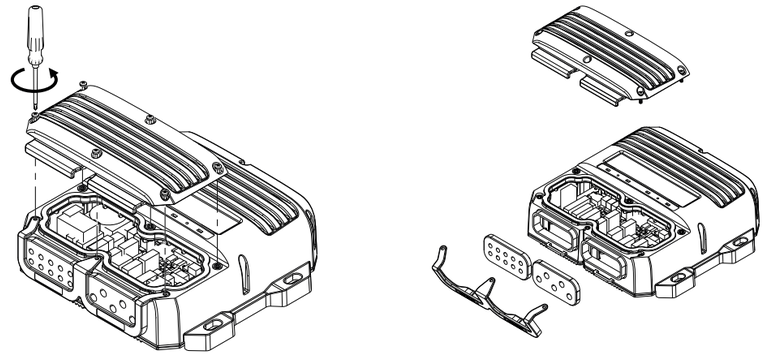

Terminal layout

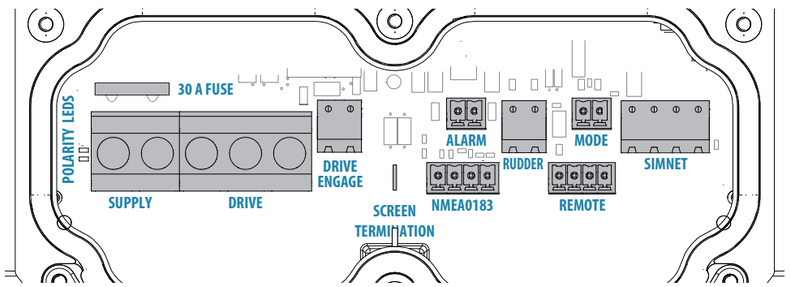

Grounding

Ground the NAC™ -3 before any other connectors

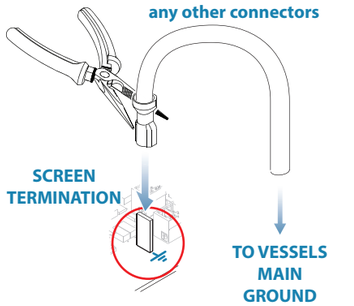

Drive units (Max 8A/12A Continuous/Peak)

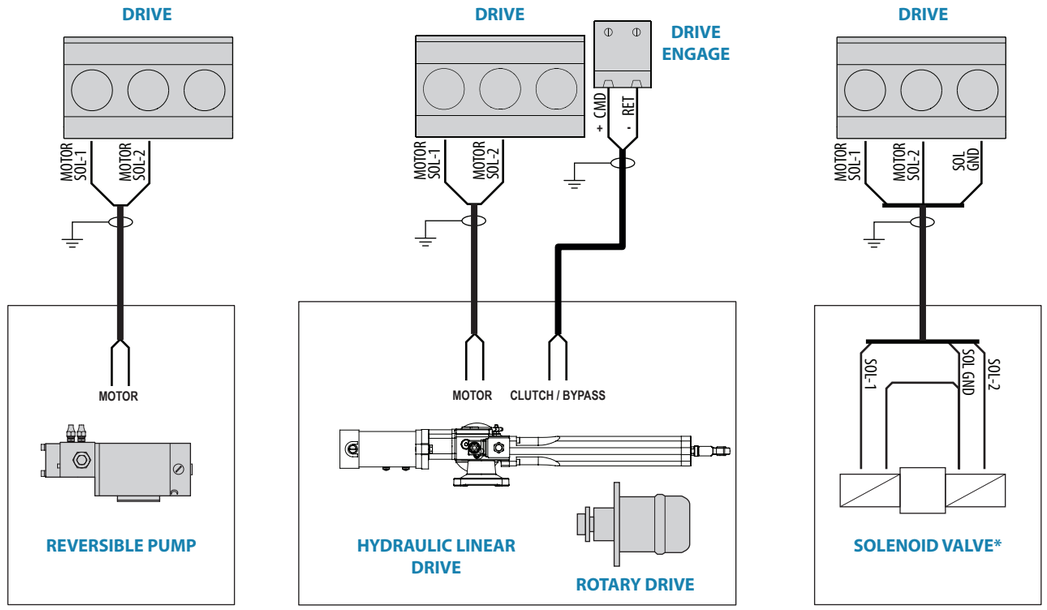

NOTE:

NAC™ -3 Autopilot cannot operate externally powered solenoids unless installing isolating relays.

NAC™ -3 Autopilot ne peut pas commander des électrovannes sans utiliser un relais isolé.

NAC™ -3 Autopilot kann keine extern gespeisten Magnetventile ansteuern sofern keine isolierten Relais installiert sind.

NAC™ -3 Autopilot kan ikke kobles mot magnetventiler med eksternt tilført spenning uten at man benytter eksterne releer.

* Solenoid valves, 12 or 24V DC, powered from NAC-3 Autopilot

Power

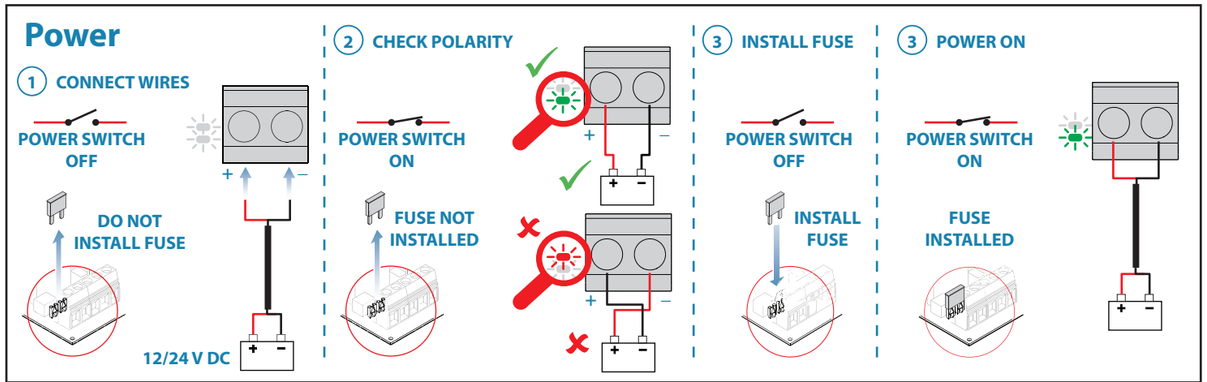

Mode/Function Selector

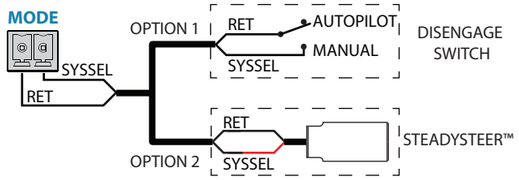

Option 1 - Disengage switch

- OPEN – Normal operation, can be controlled by controller.
- CLOSED to OPEN – Activates Auto mode, regardless of previous state.
- CLOSED - Disengaged. Cannot be controlled by controller.

Option 2 - SteadySteer™

- Manual steering overrides the active mode.
- If Auto mode or NoDrift mode was active before going into manual steering, they will automatically re-engage at the new course.
- For any other modes, the autopilot goes into Standby mode.

External Alarm

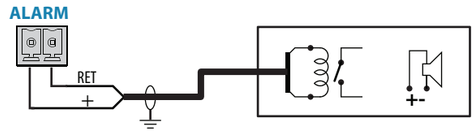

NMEA 0183

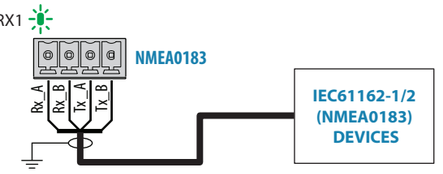

Network

SIMNET / NMEA 2000®

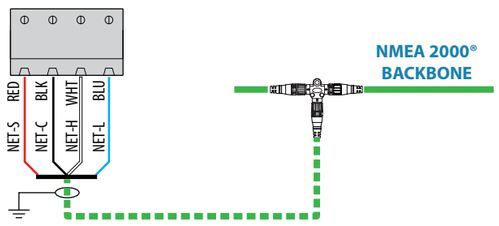

Remotes

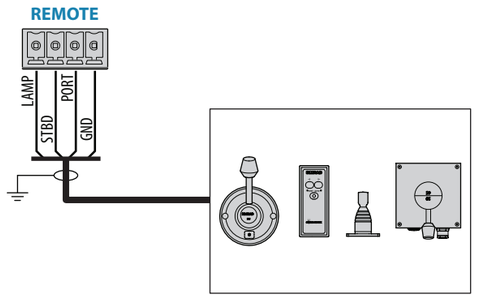

Rudder Feedback (Frequency rudder feedback)



External I/O

